SECTION 5 – APPENDIX

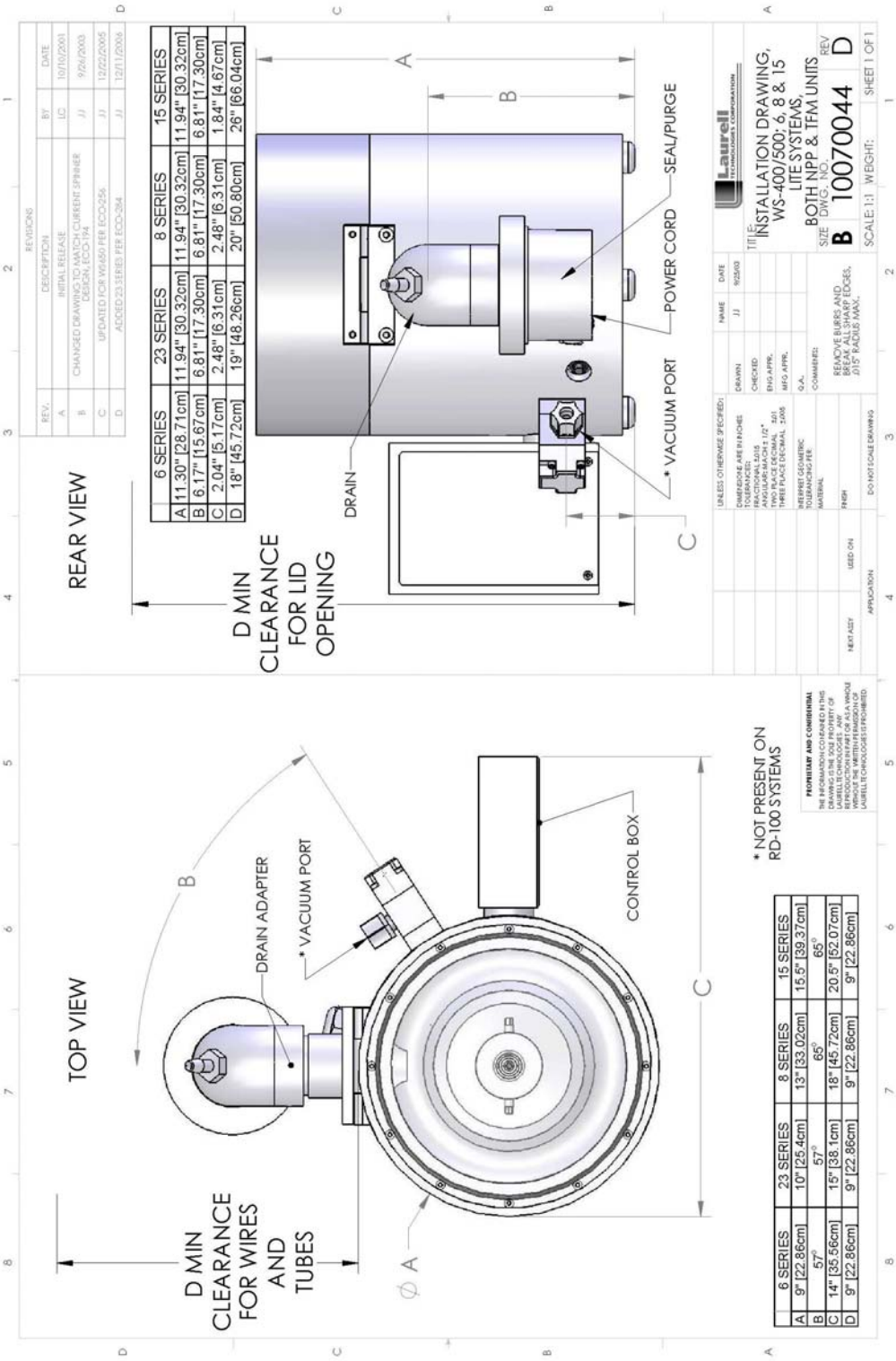

	6 SERIES	23 SERIES	8 SERIES	15 SERIES
A	11.30" [28.71cm]	11.94" [30.32cm]	11.94" [30.32cm]	11.94" [30.32cm]
B	6.17" [15.67cm]	6.81" [17.30cm]	6.81" [17.30cm]	6.81" [17.30cm]
C	2.04" [5.17cm]	2.48" [6.31cm]	2.48" [6.31cm]	1.84" [4.67cm]
D	18" [45.72cm]	19" [48.26cm]	20" [50.80cm]	26" [66.04cm]

	6 SERIES	23 SERIES	8 SERIES	15 SERIES
A	9" [22.86cm]	10" [25.4cm]	13" [33.02cm]	15.5" [39.37cm]
B	57°	57°	65°	65°
C	14" [35.56cm]	15" [38.1cm]	18" [45.72cm]	20.5" [52.07cm]
D	9" [22.86cm]	9" [22.86cm]	9" [22.86cm]	9" [22.86cm]

Figure 5.1
Dimensional Drawing – Lite Model - Tabletop

All information contained in this manual is the property of Laurell Technologies Corporation® and is NOT to be edited, reproduced or distributed without express written permission from a corporate officer.